TURBO s.r.l.
Electronic Control Systems For Dust Collectors
e-mail: info@turbocontrols.it
web: www.turbocontrols.eu
TEL. ++39 (0)362 574024
FAX ++39 (0)362 574092

# ECO-NET 128

# USER MANUAL

11-06-2016

Rel. 1.01

## Contents


General Description ..... 3
Technical Specifications ..... 3
Electric Specifications ..... 4
Warning Symbols Used In This Manual ..... 5
Installation Regulations and Warnings ..... 5
Casing Size ..... 7
Wiring Diagram ..... 8
- Connection To Pilot Valves ..... 9
- Connection To Pilot Enclosure For Valves ..... 10

Keyboard And Monitor ..... 11
Menu Layout ..... 12
- Basic Settings ..... 12
- Advanced Settings ..... 13
- Alarm Menu: ..... 14
- Calibration / Test Menu: ..... 15
- Counter Menu: ..... 16

Operation Description ..... 17
- Manual Operating Mode ..... 17
- Automatic Operating Mode ..... 17
- Proportional Operating Mode ..... 17
- Special Manual Operating Mode ..... 18

Other Function Descriptions ..... 18
- Alarms ..... 18
- Cleaning Function With Fan Off Post-Cleaning ..... 18
- Selecting The Number Of Outputs ..... 18
- Pre-Coating Function ..... 18
- Cleaning Function From Remote Control ..... 19
- 4-20mA Out Function ..... 19
- 4-20mA In Function ..... 19

Trouble Shooting *FAQ* ..... 20
Maintenance ..... 21
Scrapping ..... 21
Default Settings ..... 21
Warranty ..... 21
Warranty Exclusions ..... 21
Declaration Of Conformity Of The Manufacturer ..... 22

# General Description

The master economiser for controlling compressed air cleaning cycles in industrial dust collection systems. The pressure differential is digitally controlled by an internal transducer allowing to determine filter obstruction with accuracy.
The device has two output relay contacts and four clean digital input contacts, together with a black and white backlit graphic liquid crystal display for reading the filter obstruction level, the active solenoid valves and the time remaining before the next air jet in any moment. The device has two output relays which can be activated in case of failure of a solenoid valve or minimum and maximum obstruction.
The innovative software managed by a powerful microprocessor makes the device easy to use by everyone. No special skills needed. The menu is available in five languages.

# Technical Specifications

## Casing

- ABS base and polycarbonate lid.
- IP65 degree of water and dust protection (EN60529).
- IK08/07(8 joule) impact resistance (EN62262).
- Flammability: (UL 746 C 5): UL746C 5V
- UV resistance: UL508
- Seals: EPDM and polyurethane
- Colour: RAL 7035 light grey

## Device Features

- Backlit display with interactive menu in five languages.
- Four operating modes: manual, automatic, proportional, manual special.
- Operating times expressed in seconds and minutes with selectable ranges for any application.
- Four selectable pressure measurement units: kPa, millibar, mmH2O, Inch w.c.
- Solenoid valve serial line output voltage: 24 Vdc.
- Power voltage 100-240 Vac 50-60 Hz without needing to select jumpers.
- Possibility of 24 Vac/Vdc power (optional).
- "Fan off" (post-cleaning) washing function using the "fan Δp" threshold in automatic/proportioning mode and by means of contact in manual/manual special mode with selectable number of cycles up to 100 cycles.
- Hour meter and pulse count.
- Two alarm relays.
- Minimum "Broken Hose" Δp alarm (with on/off selection).
- Maximum Δp (filter obstructed) alarm.
- Solenoid valve not working alarm.
- Filtering element maintenance alarm (with on/off selection).
- External contact cleaning activation.
- Compressed air presence enable input.
- Precoating function.
- Active 4-20mA output proportional to dP reading for remote pressure reading.
- Manual solenoid valve activation.
- 4-20mA input (optional).

# Electric Specifications

## Electric power:

100-240 Vac ±10% 50-60 Hz
24Vac ±10% 50-60 Hz (optional)
24Vdc ±10% (optional)

Important: Read the installation instruction section before connecting the device.

## Output voltage:

24Vdc (MAX 25W@ Ton Max 10s)

The solenoid valves connected to the master unit are normally closed. The activation of a solenoid valves causes them to open and consequently let out a jet of air.

## Fuse

1 x 1A
1 x 3A (optional, with 24 Vac/Vdc)

## Working Temperature

from -10°C to 55°C

## Storage temperature

-20°C to 60°C

## Timer specifications

## Pulse time (valve opening)

from 50 ms to 10 s

## Pause time (interval between valve openings)

from 1 sec. to 7200 sec.

## Differential pressure gauge

Measurable pressure range: from 0 to 10 kPa
Maximum applicable pressure: 50 kPa - 0.5 bar

Important: Higher pressures may damage the device. Do not connect the obstruction measuring pipes to the compressed air circuit.

## Warning Symbols Used In This Manual

The safety-related indications are highlighted using the symbols:

| | | |
|---|---|---|
| | Attention-Danger | Warning Generic |
| | Risk – Danger | Electric Current |
| | Dispose of in compliance with the electrical and electronic equipment Standard WEEE | |

## Installation Regulations and Warnings

- Protect the equipment from direct exposure to sunlight.
- Do not position the equipment near or directly in contact with sources of heat or electromagnetic fields.
- Fix the equipment at a height of at least 60 cm from the ground.

  In a clearly visible place that is easily accessible.
- Connect the equipment to power lines other than those used for operating motors or other high power devices, which could generate network interference or instability.
- The unit electric power supply must be protected by a 230Vac~ 30mA Residual Current Device RCD and a bipolar 230Vac~ 10A magnet circuit breaker, positioned in a place that is easily accessible.
- Before intervening on the equipment to perform any operation, deactivate the magnet circuit breaker switch.
- For electric operations, always remove voltage, wait 30 seconds for the internal capacitors to discharge before opening. At the end of the operations, close the equipment before powering up.
- Before intervening on the equipment to perform any operation, check the conditions of the atmosphere are safe.
- For connection of the supply voltage, use flame-retardant wires with a minimum section of 0.75mm² certified and conform to the IEC 60227 or IEC 60245 standard.
- Use flame-retardant cables with a minimum cross-section area of 0.75 mm² for all control signals.
- Use flame-retardant cables with a minimum cross-section area of 0.75 mm² to connect to the indicating relays.
- Use flame-retardant cables with a minimum cross-section area of 0.5 mm² for electro valves control signals.
- The earth wire must be yellow/green.
- The earth wire must be connected first.
- The yellow/green wire must only be used for the earth connection.

- The cable glands must be chosen according to the diameter of the cable to be used.
- Sealing of the cable glands is guaranteed by the compression of the rubber gasket that tightens on the outer diameter of the cable.
- The size of cable and cable gland must ensure that power cord traction is not acting on the terminals.
- The terminal block must not be the mechanical anchorage point of the wires.
- The cable gland PG9 supplied on request, has minimum cable diameter of 4 mm and maximum of 8 mm, with 19 mm clamping nut.
- Any use not described in this user instruction manual or incorrect use of the device may cause damage to the device or to the equipment connected to it.
- Furthermore, incorrect use or tampering with the equipment may cause injury.
- The impermeability of the casing is guaranteed when the door is closed.
- Make sure that rigid or flexible ducts used for wiring, do not fill up with water or other liquids.
- Do not make unprotected holes in the container or holes that are protected by accessories with protection rating lower than that of the control unit.
- Cut off power supply immediately if water is found in the casing.
- If the control unit is used in ways not specified by the manufacturer, the protection provided by the device may be impaired.
- The Control Unit does not release potentially toxic or harmful substances to the health and the environment.
- No part with dangerous voltage is normally accessible.

Do not use the control unit if you have not read or do not understand this manual.

## Casing Size

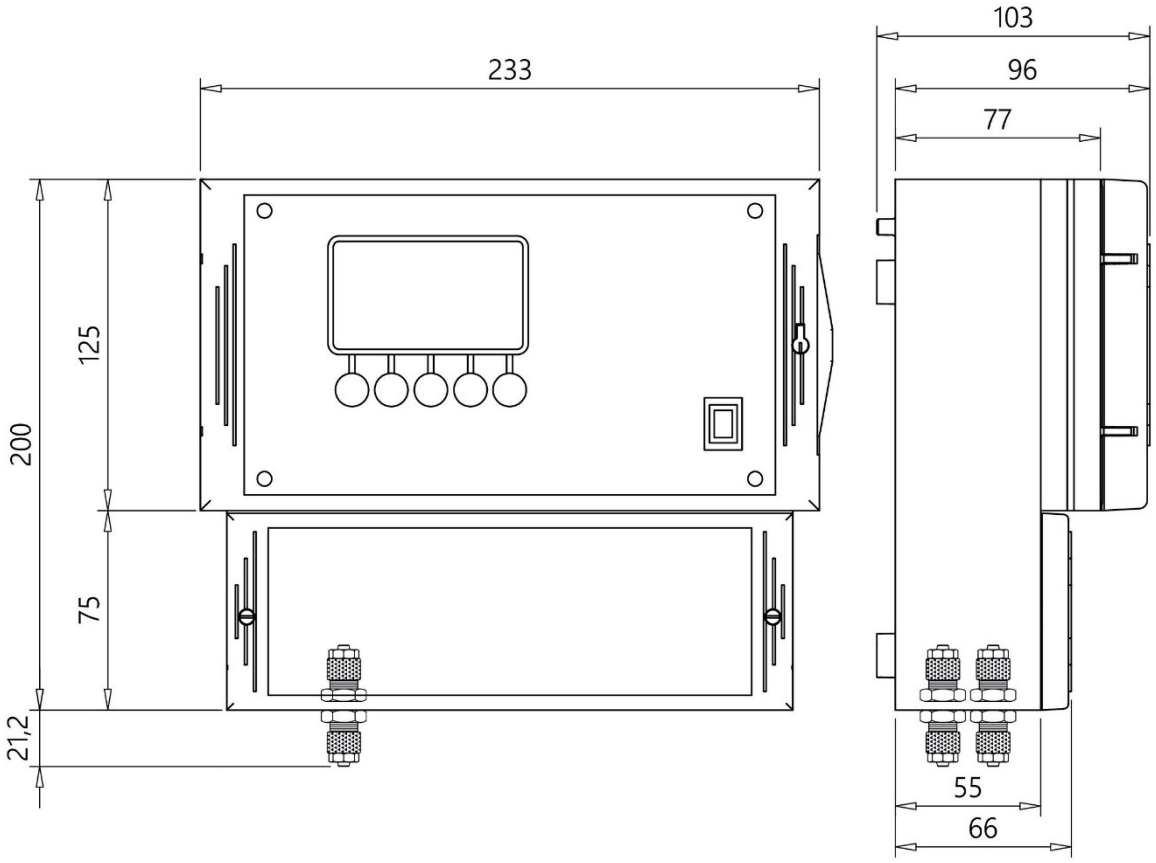


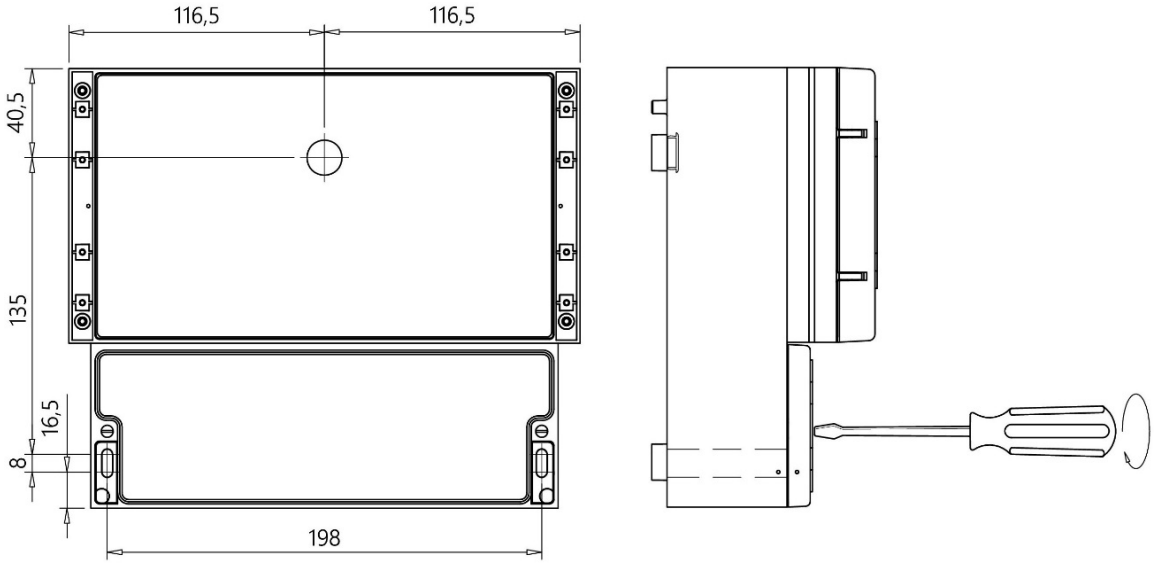

# Wiring Diagram

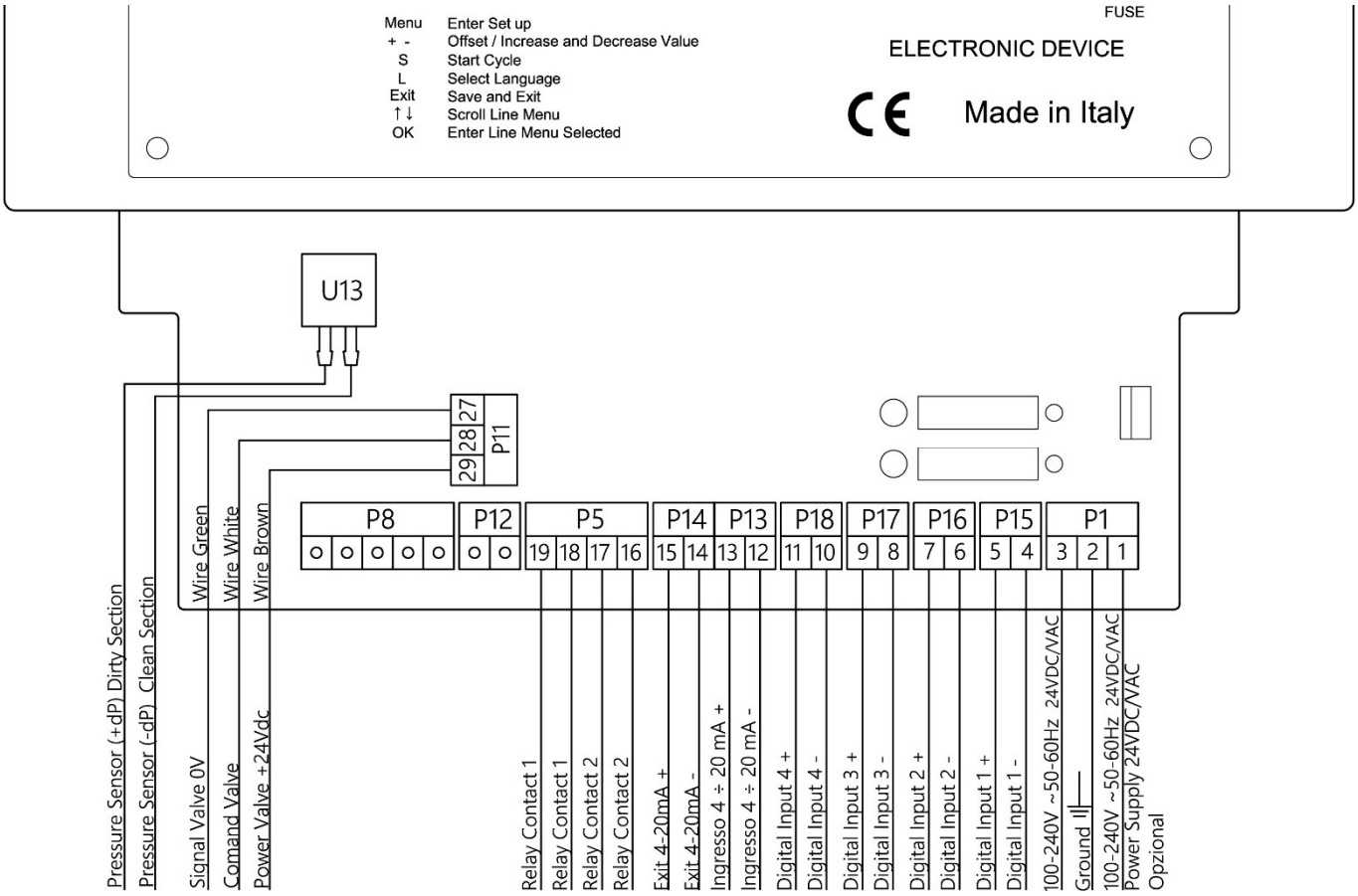


## Terminal board key

P1 = Economizer power 100-240 Vac (24 Vac/Vdc optional)

P15 = Cleaning with fan off (post-cleaning) contact (clean contact)

P16 = Remote enabling contact (clean contact)

P17 = Filter fan hour meter contact (clean contact)

P18 = Digital input (clean contact) - Spare (optional)

P13 = 4-20mA in input (optional)

P14 = 4-20mA output (the maximum applicable load is 300 Ohm)

P5 = Alarm relay contacts

Important note: Terminal relay contacts 16_17 / 18_19 must only be used for SELV voltages (max. 24 Vac / 24 Vdc) supplied via a safety isolation transformer.

P11 = Solenoid valve connector

U13 = Differential pressure sensor (dP internal transducer + dirty / dP - clean)

## Connection To Pilot Valves

Connect the power supply wiring cable to the solenoid valves from the P10 connector on the terminal of control board to the first electro valve in the input indicated with IN:

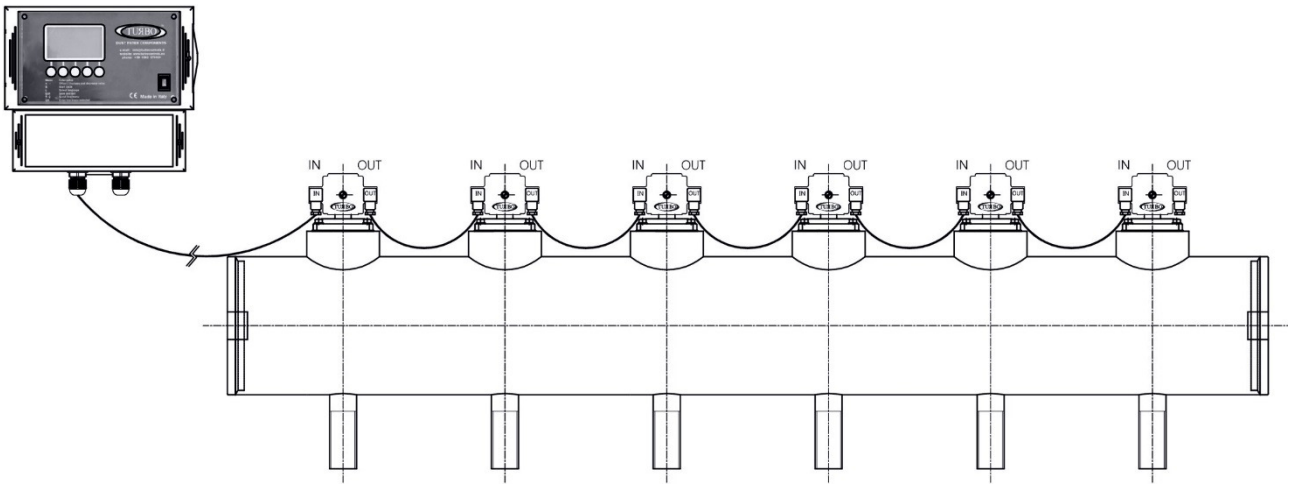


connect the other electro valves sequentially using the wiring harness with the PG7 connectors respecting the IN -> OUT polarity, assemble the gaskets to ensure the IP seal of the circuit.

The connector of the last electro valve marked OUT and not used must be closed with a PG7 connector by removing the cylindrical rubber plug provided as protection for transport-only.

wires of the connection cable must be connected to the polarized connectors at the positions:

- 1 brown wire power supply +
- 2 white wire activation signal
- 3 green wire power supply
  central position with gnd symbol

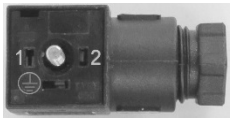


The cable used for wiring is of the type H05VV-F 0.72 mm² - 19 Awg

## Connection To Pilot Enclosure For Valves

Connect the power supply wiring of the pilots enclosure for the solenoid valves from connector P10 of the terminal block of the control board, to the first ERCP enclosure pilots for the activation of the pneumatic valves, in the input indicated with IN:

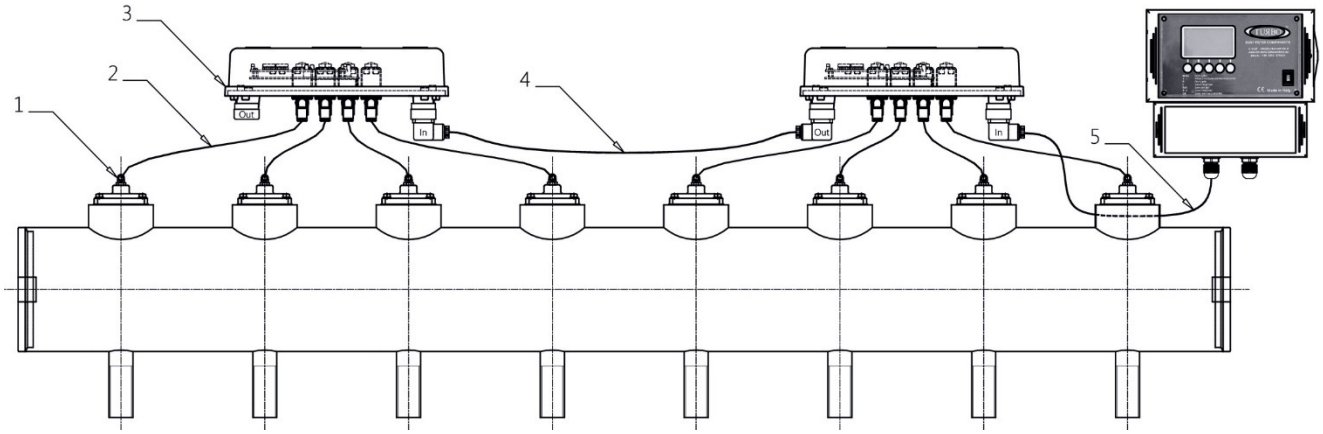


| | |
|---|---|
| 1 | Pneumatic valve with remote control actuation |
| 2 | Connection hose between the remote pilot and the valve |
| 3 | Enclosure box with integrated pilots for valve actuation |
| 4 | Connection wiring cable between the enclosure boxes ERCP |
| 5 | Connection wiring cable from control unit to enclosure boxes |

Connect the ERCP enclosure boxes in sequence using the wiring harnesses with the DIN 43650 connectors to be fixed to the cylindrical sideburns.

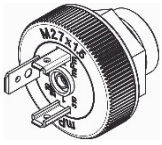

Respecting the IN -> OUT polarity, fit the gaskets to guarantee the IP seal of the circuit.

## Keyboard And Monitor

There are 5 round keys on the front panel to control the Master and select functions.

When turned on, the screen displays the software version during initialisation:

The next screen is always displayed during normal operations:

- Menu

  Provides access to settings
  it is used as RESET in the event of alarms

- Keys + −

  Increase and decrease the values, manually start valves in Test mode, used to scroll any alarms

- The **S** key starts/stops solenoid valves in manual/special manual mode. It is not enabled in automatic/proportional mode.
- Use the **L** key to select one of the 5 available languages: Italian, English, French, German, Spanish.

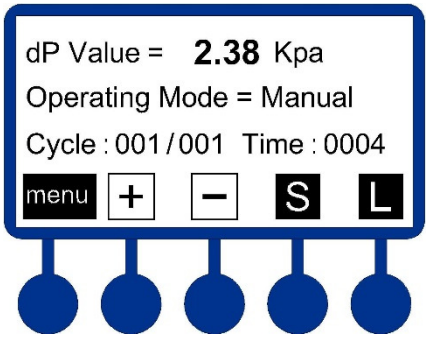

# Menu Layout

## Basic Settings

Press the menu key.

Use the arrows ⬆ ⬇ to select Main Set Up
Press **OK**

Use the arrows ⬆ ⬇ to select the item to be set.

Use keys + − to increase or decrease the value and change the item conditions, for example switch between Manual, Autom, Proport, Special or between mm H2O, Mbar, kPa, Inch w.c.
Press **exit** to save and exit.

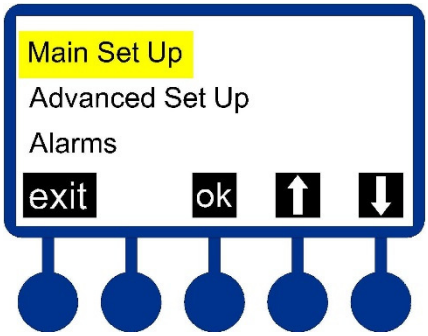


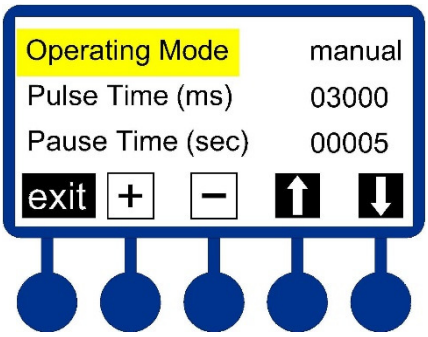


| | |
|---|---|
| **Operating Mode** | Select the operating mode (Manual Autom Proport. Special) |
| **Pulse time (ms)** | Valve opening time (50 msec. – 10 sec.) |
| **Cycle time (sec)** | Interval time between valve opening (1 sec – 7200 sec) |
| **No. valves** | Select the number of connected valves (1 - 128). |
| **Unit Measure** dP | Select the dP reading unit of measure (mm H2O Mbar kPa Inch w.c.). |
| **dP Start Cleaning** | Enter the start cleaning dP value (for Autom. Proport operating mode only) |
| **dP Stop Cleaning** | Enter the end cleaning dP value (for Autom. operating mode only) |

## Advanced Settings

Press the **Menu** key in the home page.

Use the arrows ⬆ ⬇ to select Advanced Set Up.
Press **OK**

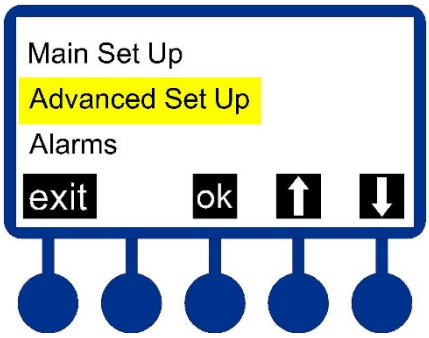


### Advanced Set Up Items

Use the arrows ⬆ ⬇ to select the item to be set.
Keys + − to increase/decrease the value or change an item condition such as Enable / Disable.
Press **exit** to save and exit.

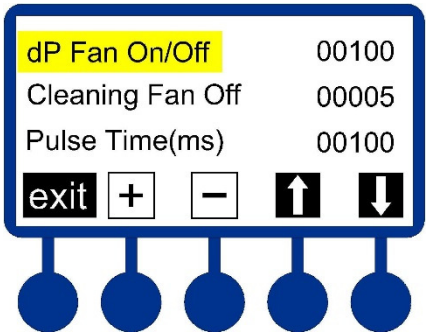


| | |
|---|---|
| **dP Fan On/Off** | dP threshold tied to fan on/off for which the tool recognises that suction is on over the set threshold while cleaning cycles are started with the fan off under it (Post-Cleaning). |
| **Cleaning Fan off** | Number of complete cleans with fan off for the number of connected solenoid valves. |
| **Pulse time (ms)** | Valve opening time in cycles with fan off (50 msec. – 10 sec.) |
| **Cycle time (sec)** | Interval between valve openings in cycles with fan off (1 sec - 7200 sec.) |
| **Precoating** | Enables the Precoating function. |
| **dP Precoating** | Enter the dP value where the pre-coating function is kept enabled. When exceeded the instrument returns to the originally set operating mode. |
| **Cycles Man. Spec.** | If Special operating mode was selected in basic set up, enter the number of complete cycles for the number of connected solenoid valves to be completed |

| | |
|---|---|
| **Pause Man. Spec.** | If Special operating mode was selected in basic set up, enter the pause between the numbers of cycles. |

## Alarm Menu:

Press the **Menu** key in the home page.

Use the arrows ⬆ ⬇ to select Alarms.

Press **OK**

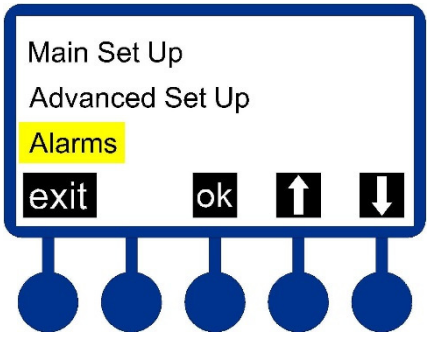


### Alarm Menu Items

Use the arrows ⬆ ⬇ to select the item to be set.

Keys + − to increase/decrease the value or change an item condition such as Enable / Disable.

Press exit to save and exit.

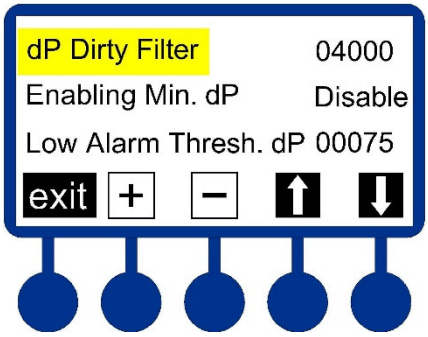


| | |
|---|---|
| **dP Dirty filter** | Enter the dP threshold to trigger the clogged filter alarm. |
| **Enabling Min. dP** | Minimum dP alarm enabling (broken sleeve). |
| **Low Alarm Thresh. dP** | Enter the dP threshold to trigger the Minimum dP alarm. |
| **Hourmeter Fan** | Enabling the fan hour meter. Connect the fan filter remote switch to terminals 8_9 connector P17, to count actual suction working hours. |
| **Replace Filters (h)** | Enter the number of working hours desired to trigger the filtering element replacement alarm (sleeves/cartridges), the alarm is only generated if the fan hour meter is enabled and the fan remote switch connected to terminals 8_9 on connector P17 on the electronic board. |

## Calibration / Test Menu:

Press the **Menu** key in the home page.

Use the arrows ⬆ ⬇ to select Calibration/Test.
Press **OK**

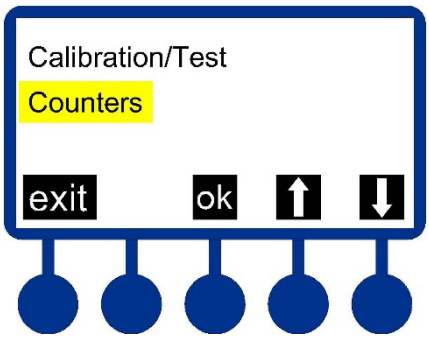


### Calibration / Test Menu Items

Use the arrows ⬆ ⬇ to select the item to be set.
Keys + − to increase/decrease the value or change an item condition such as Enable / Disable.
Press **exit** to save and exit.

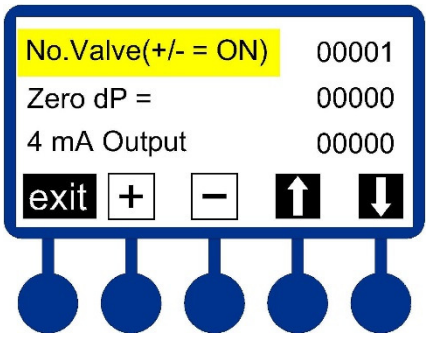


| | |
|---|---|
| **No. Valve (+/- = ON)** | Press the keys + − to manually start the solenoid valves connected to the electronic board in sequence. |
| **Zero dP =** | Press in sequence the keys + − to calibrate zero dP, press the + hold it down then press the -. Run this operations with the filter fan off. |
| **4 mA Output** | Press the keys + − to calibrate the 4mA output which corresponds to zero dP. |
| **20 mA Output** | Press the keys + − to calibrate the 20mA output which corresponds to dP full scale. |

**Counter Menu:**

Press the **Menu** key in the home page.

Use the arrows ⬆ ⬇ to select the Counter item to be set.

Press **OK**

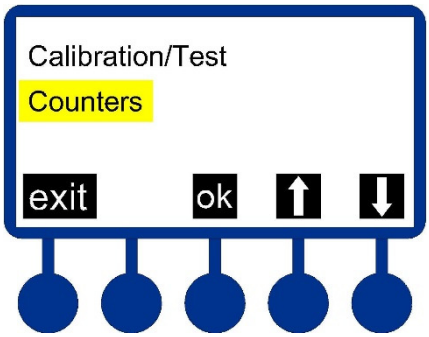


Counter Menu Read-Only Items

| | |
|---|---|
| **Hours Power On** | Hours the electronic board is on. |
| **Pulse count** | Number of times the valves connected to the electronic board were started. |
| **Hours Fan** | Hours the filter fan is on.<br>The counter is only on if the filter fan remote switch is connected to terminals 8_9 on connector P17 and the fan hour counter function enabled in the alarm menu. |

## Operation Description

When the economizer is powered, the display lights and, after the welcome message, the following type of message is displayed:

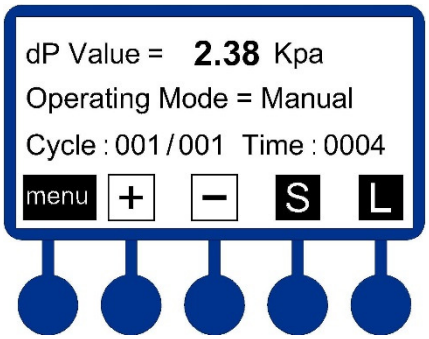


The displayed information is: the operating mode, the internal dust filter pressure, active outputs and the time necessary to activate the next output.

### Manual Operating Mode

When manual operating mode is set, the economizer works as a programmable cycle sequencer. The connected outputs will be activated at programmed time intervals. Manual operating mode can be selected in the basic set up menu under the first menu item. Intervals are programmed in the same menu where activation time, pause time and the number of solenoid valves connected to the device are set.

### Automatic Operating Mode

When Autom. Mode is selected from the basic set up menu, first menu item, the economizer will work autonomously running pneumatic cleaning only when necessary. If the device detects clogging over the dP Start Cleaning threshold, cleaning is started.
If clogging drops under the dP Stop Cleaning threshold, cleaning is suspended, until the pressure rises to a value over dP Start Cleaning.
When cleaning, the time in which the economizer cleans can be set in the basic set up menu.

### Proportional Operating Mode

By selecting the PROPORT. mode in the basic set up menu, the economizer works autonomously initially setting the Start Cleaning threshold, pulse time and pause time. Automatically, when the Start Cleaning threshold is exceeded, the solenoid valves are activated in sequence. If the dP threshold lowers 15% at the end of an entire pulse cycle for the connected solenoid valves, cleaning is suspended until the pressure rises over the dP Start Cleaning threshold.
If the dP value does not drop 15% under the Start Cleaning threshold, the pause time frequency is automatically reduced proportionately at each complete cycle of connected solenoid valve pulses, until a pause time between solenoid valves is minimum 10 seconds. The minimum 10 second threshold was chosen to not stress air distribution by the compressor connected to the filter.

### Special Manual Operating Mode

In the basic set up men, first menu item, select SPECIAL mode, enter the pulse time and pause time. Open the advanced set up menu, second menu item, enter the number of complete cycles and pause time between these cycles for the connected solenoid valves. With this mode, unlike manual mode, the device only runs the solenoid valves for the set number of cycles and will remain in stand-by until an operator presses **S** (start / stop) in the main menu to repeat the cycles. This mode is especially suited for small filters or filters where the dP has low values or the inverter keeps pressure constant and it is hard to work with automatic and proportional modes.

## Other Function Descriptions

### Alarms

This function allows an alarm device to be connected. The alarm device can be connected to two alarm relays (see wiring diagram) which are opened when the threshold set in the ALARMS menu is exceeded. For details, see the third menu item and the description in the Accessing the Alarm menu section.

When an alarm is triggered, it is signalled on the display by a blinking row that is normally occupied by the operating mode. The menu key is used for RESET and keys + − can be used to scroll any alarm items that may have triggered for relay no. 1: dP minimum (if enabled in the menu), dP Dirty Filter, Replace Filters (if enabled in the menu) while failed valve activation is signalled with relay no. 2.

### Cleaning Function With Fan Off Post-Cleaning

This function allows a cleaning cycle to be run with the fan off.
Post-cleaning is automatically activated in Automatic and Proportional operating modes and when differential pressure drops under a threshold that can be set in the advanced set up menu, second menu item.
While in Manual and Special Manual modes, it occurs through a contact connecting the fan to terminals 4_5 on connector P15, see wiring diagram.
In the advanced set up menu, the following post-cleaning settings can be set:
Start cleaning with fan off (Enable/Disable)
Activation pressure (dP fan ON/OFF threshold)
Number of cycles (cycles completed)
Pause time (pause duration between one solenoid valve start and the next during post-cleaning).
Pulse time (cleaning pulse duration regardless of the fan on operating time).

### Selecting The Number Of Outputs

The number of outputs (solenoid valves) on which the economizer runs the cleaning cycle can be selected. Cleaning is run in order from the first solenoid valve to the last. Valve regulation is possible in the basic set up menu.

### Pre-Coating Function

This function lets you run pre-coating. Pre-coating is a filter element treatment run with a powder called pre-coating powder. During the pre-coating phase, cleaning is suspended until the dP pre-coating threshold is reached.
In the advanced set up menu, the following pre-coating settings can be set:
Pre-coating start: Enable (on) / Disable (off)
Disable pressure (dP pre-coating)

## Cleaning Function From Remote Control

This function lets you pneumatically clean only after an external consent is received. The external consent can be connected to prevent cleaning without pressure in the high pressure circuit or in the compressed air tank.

The external contact must be voltage free, normally open and connected to terminals 6_7 connector P16, see wiring diagram.

## 4-20mA Out Function

This function lets you check pressure readings from remote through 4-20mA transmitter.

Connect the signal to be sent to the remote device to terminals 14_15 on connector P14.

The gain range can be set in the Calibration/Test menu, see Accessing the Calibration and Test Menu section.

## 4-20mA In Function

Terminals 12_13 on connector P13 can be connected to a tribo electric probe that generates a signal in current that varies from 4 - 20 mA.

The signal intensity varies as the concentration of dust in the air varies. With a low particle percentage, the signal is at the minimum. It increases as the particle concentration increases.

## Trouble Shooting *FAQ*

| Fault | Possible Cause | Solution |
|---|---|---|
| The display does not light up. | Burnt fuse.<br>Power voltage. | Check the protection fuse on the power voltage.<br>Check that the power voltage is present and compliant with that required for the device (terminals 1 and 3). |
| The outputs do not light up. | Output voltage.<br>Wiring to solenoid valves. | Check that the timer and solenoid vale output voltage agree.<br>Check wiring between timer and solenoid valves. |
| The differential pressure reading is not correct. | Obstructed pneumatic connections.<br>Damaged pipes. | Check that the differential pressure is 0.00 kPa with the pipes disconnected. In this case, check that the connection pipes between device and filter are not obstructed or damaged. |
| The cleaning cycle is not carried out. | The economizer is in economy mode and therefore does not start up. | Adjust the start-up pressure threshold or set the economizer to MANUAL mode. |
| Does the economizer occasionally reset? | | Check that there are no unfiltered pulse loads on the power line (spot welding machines, welding machines, plasma cutters etc.). Install a filter on the economizer power line, if needed. |
| Does post-cleaning start during normal cleaning? | | Change the post-cleaning start-up threshold by lowering it. |
| Does post-cleaning fail to start when the normal cleaning cycle ends? | | Activate post-cleaning from the advanced configuration menu.<br>Check that the measured pressure is lower than the post-cleaning activation pressure when the fan is off. |
| Do the alarms fail to activate signaling devices? | | The alarm devices must be powered by voltage external to the economizer. A relay opening is needed to activate them. |
| Does 0.0 kPa-mmBar-mmH20-Inch w.c. fail to appear when the fan is off? | | Set the reading to 0 under the zero dP option in the Calibration/Test menu. |
| Do alarm messages appear? | | Check the Alarms menu. |

## Maintenance

The control unit has no parts that can be replaced, except for the fuse.

All repair operations must be carried out by the manufacturer.

To clean dust and dirt from the surfaces, gently rub with cotton or other soft cloth soaked with non-aggressive, non-abrasive detergents; use those for glass surfaces; do not use solvents or aromatic compounds and do not rub with abrasive sponges.

## Scrapping

Dispose of properly after use. Dispose of the product according to laws in force for electronic equipment.

This device is for use in a dust collection system and is therefore part of a fixed installation.

## Default Settings

The default settings are:

| Setting | Value |
|---|---|
| Operating Mode | Automatic |
| Start Of Cleaning Dp<br>End Of Cleaning Dp | 0.80 kPa<br>0.40 kPa |
| Pulse Time | 200 msec |
| Pause Time | 20 s |
| Post-Cleaning Activation | 0.10 kpa |
| Start Precoating Dp | 1.50 kpa |
| Language | Italian |

## Warranty

The warranty lasts for two years. The manufacturer will replace any faulty electronic component exclusively at their own facilities only, unless otherwise authorized in advance by the manufacturer.

## Warranty Exclusions

The warranty will be cancelled in case of:

- Signs of unauthorized tampering or repairs.
- Incorrect use of the device not respecting technical data.
- Incorrect electric connections.
- Failure to respect system standards.
- Use not in accordance with EC standards.
- Atmospheric events (lightening, electrostatic discharges,), power surges.
- Obstructed pneumatic connections. Damaged tubes

# Declaration Of Conformity Of The Manufacturer

The manufacturer:

**TURBO SRL**

The manufacturer's address:

**Via Po 33/35 20811 Cesano Maderno, Italy**

Declares that the product:

**Serial Master Economizer**

Model:

**EcoNet 128**

Complies with the following directives:

Directive 2014/30/EU Electromagnetic Compatibility compliant with Harmonised European standards EN61000-6-2:2005 class B of EN61000-6-4:2001

Directive 2014/35/EU Low Voltage compliant with Harmonised European Standards EN 60947-1:2004

This product was tested using standard settings.

Cesano Maderno, 11 June 2016

**F. Messina (C.E.O.)**

**TURBO s.r.l.**

**Code And Serial Number**